Sr.NO	MECON COMMENTS	osm reply
1	Furnish Detail of Pulleys such as face width.Shell thickness shaft dia. At bearing,bearing no etc.	Incorporate in the drawing
2	Coordinates of head & tail end.	Incorporate in the drawing
3	Furnish cover grade.	Incorporate in the drawing
4	Shall match with power calculation sheets.	Incorporate in the drawing
5	Shall be as per coasting time calculation.	Noted
6	207m(min)	Incorporate in the drawing
8	Nos. or Sets, Check & revise	Incorporate in the drawing
9	190mm(outer dia including 25mm rubber disc thk)	Incorporate in the drawing
11	Also check appears to be on lower side.	Incorporate in the drawing
12	shall be elastomount of segmented sprung metallic blades (Spring Steel) with tungsten carbide tips and shall be adjustible.	Incorporate in the drawing
13	Chute Jamming Detector.	Incorporate in the drawing
14	It seems many of our comments are not incorported, Provide compliance of the same.	Incorporate in the drawing
15	Other general comments given in earlier revisions of other drawings has not also been incorporated,comply.	Incorporate in the drawing
16	All bought out items shall be as per preferred make list of contract.	Incorporate in the drawing
17	Shaft material. Type of bearing.Type of sealing bearing life, bearing housing etc.	Incorporate in the drawing
18	Shall be of Torsion Arm type, with adjustible segmented polyurethane blades backed by steel plates	Incorporate in the drawing
19	Type of cooling ?	FAN cooling
20	Furnish no.of rolls	Incorporate in the drawing

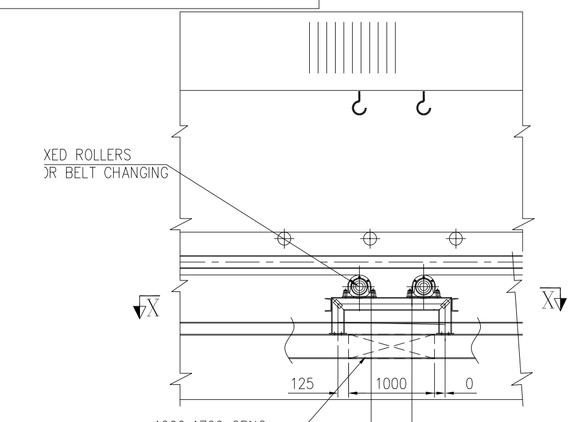

ENLG. DETAILS AT 'M'
AT BELT CHANGING ROLLER

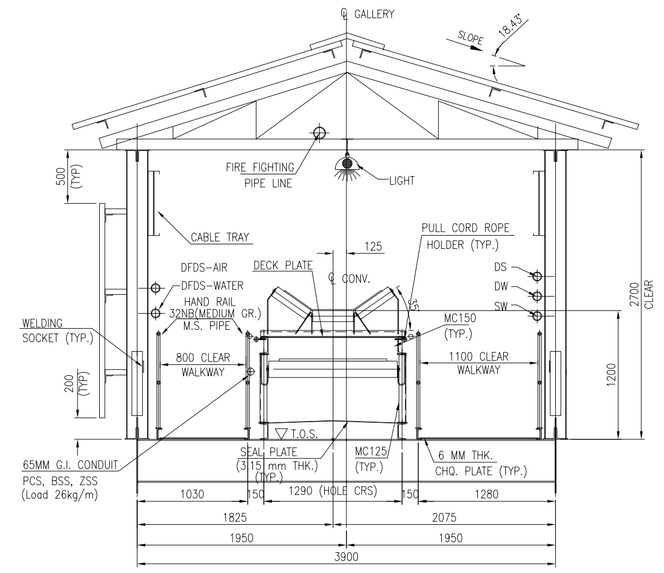

VIEW 2-2
TYPICAL GALLERY CROSS SECTION
(LOOKING FROM HEAD END SIDE)

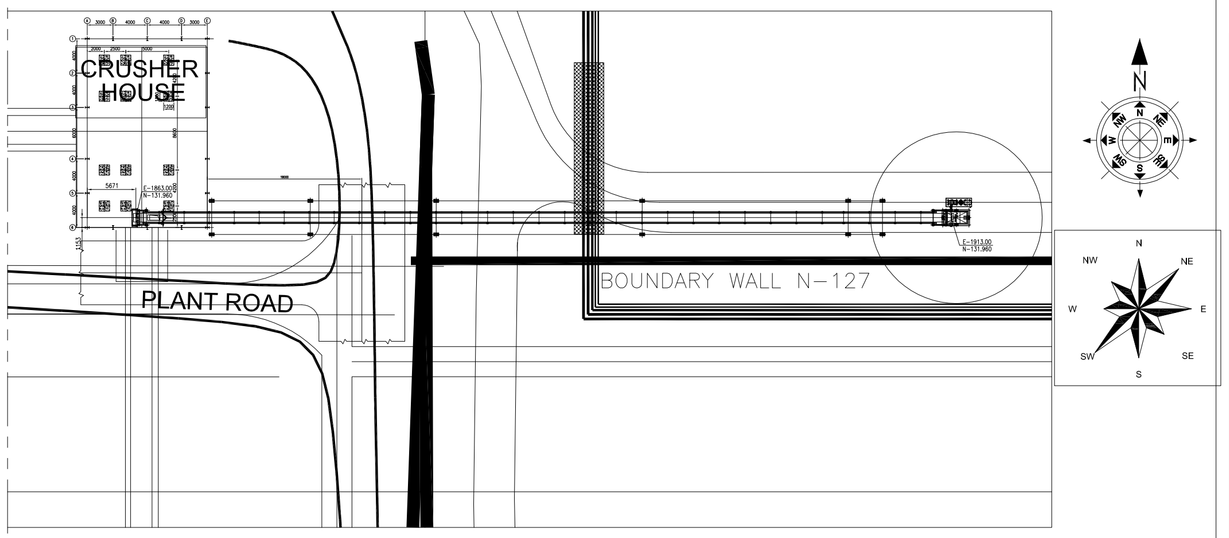

KEY PLAN

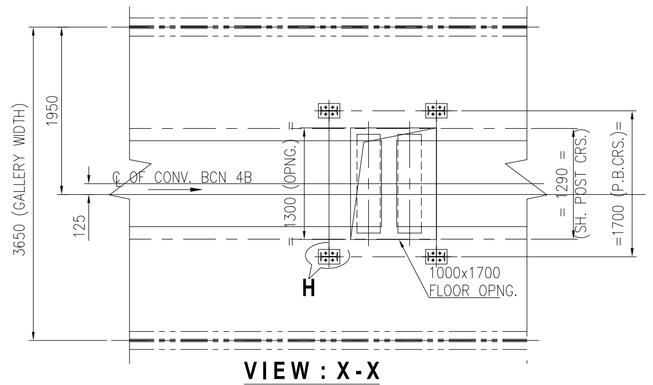

VIEW : X-X

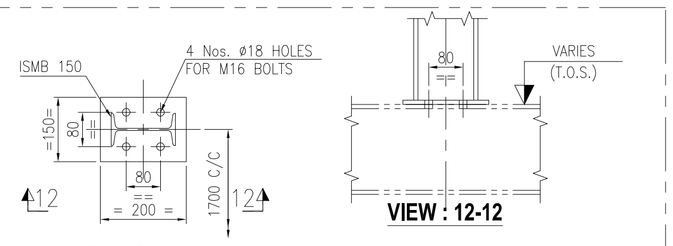

DETAIL AT -H

VIEW : 12-12

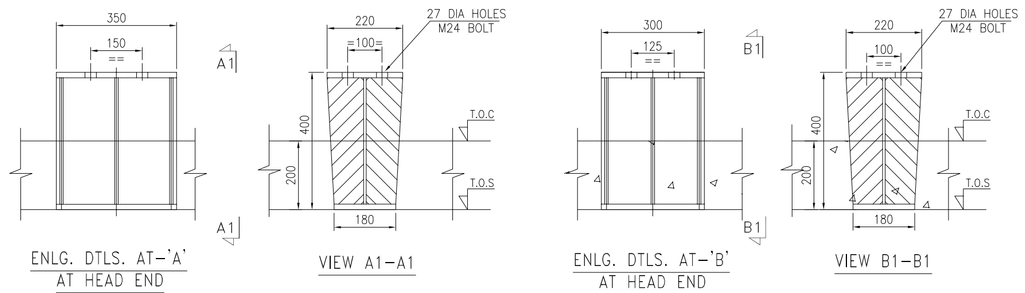

ENLG. DTLS. AT-'A' AT HEAD END

VIEW A1-A1

ENLG. DTLS. AT-'B' AT HEAD END

VIEW B1-B1

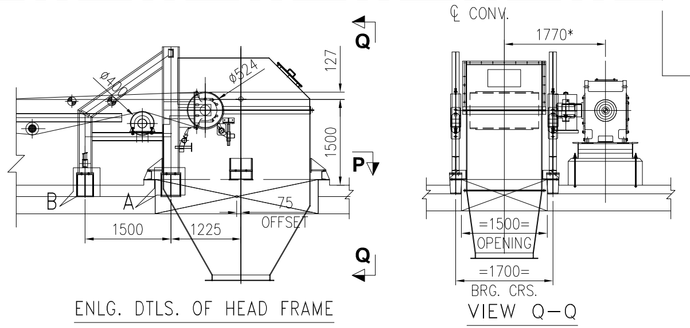

ENLG. DTLS. OF HEAD FRAME

VIEW Q-Q

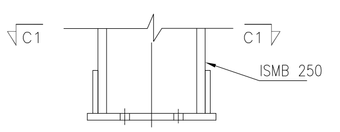

ENLG. DTLS. AT-C' AT TAIL FRAME

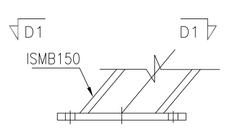

ENLG. DTLS. AT-D' AT TAIL FRAME

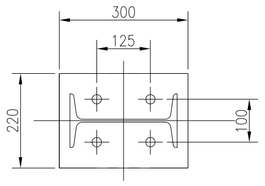

PLAN ON C1-C1

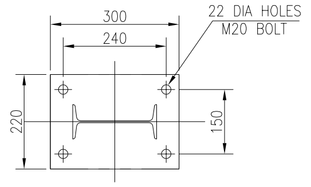

PLAN ON D1-D1

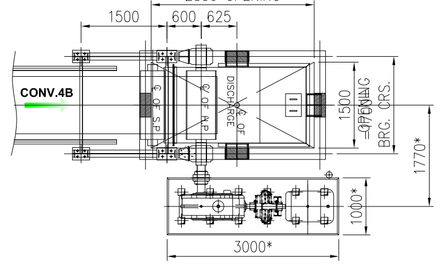

VIEW P-P

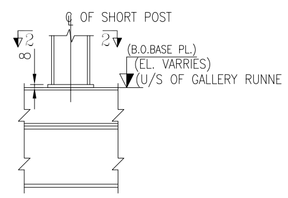

DETAIL - F

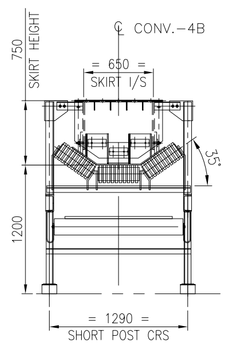

SECTION : V - V
(TYPICAL CROSS SECTION OF SKIRT)

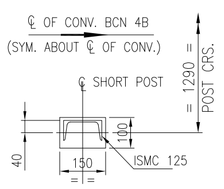

VIEW : 2-2

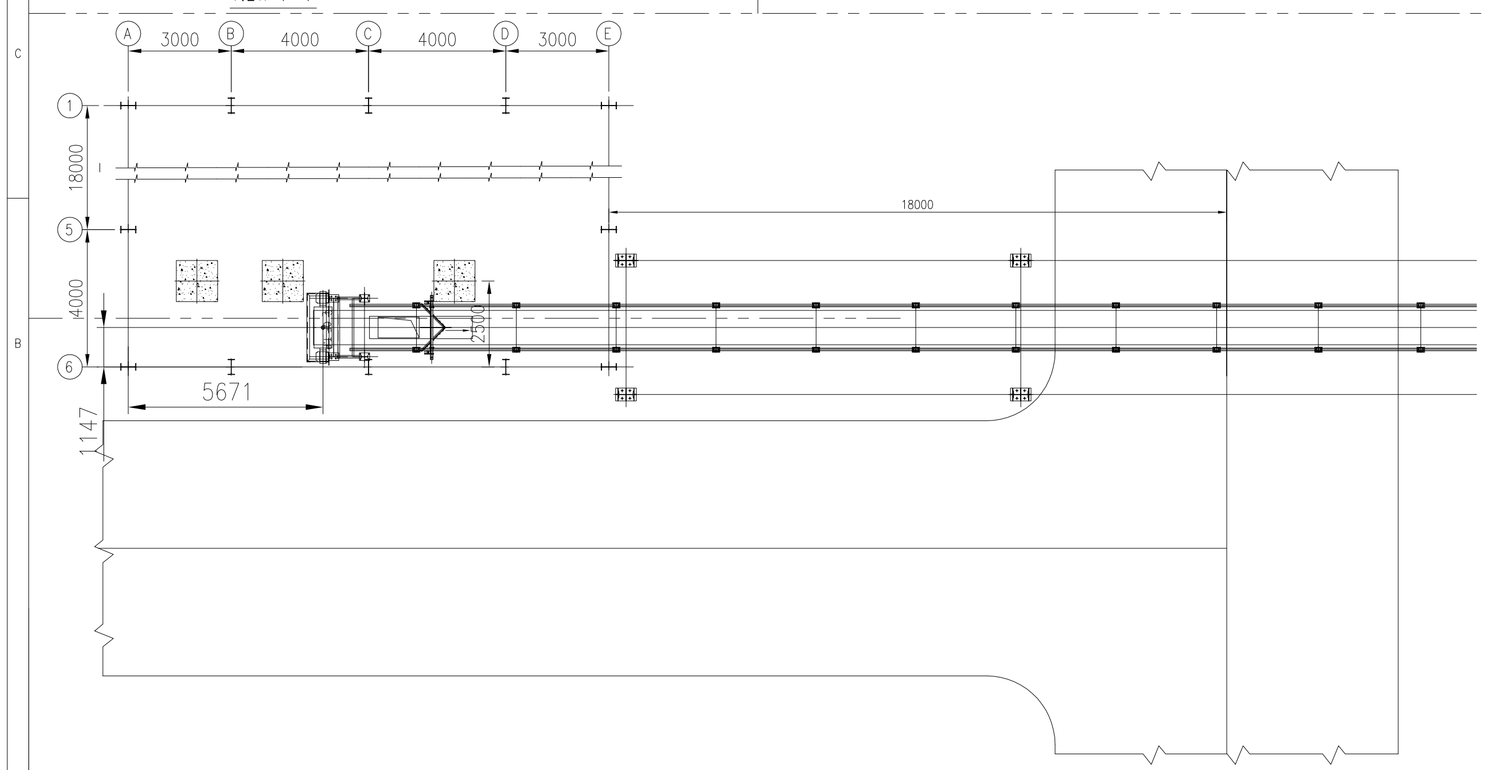

LEGEND FOR CONVEYOR		
⊕	CARRYING IDLER	C.I
	TRANSITION IDLER	T.I
	1 ROLL RETURN IDLER	R.I
●	FLAT RETURN IDLER	F.R.I
	IMPACT IDLER	I.I
	SELF ALIGNING CARRYING IDLER	S.A.C.I
	1 ROLL SELF CLEANING RETURN IDLER	S.C.I
	DEFLECTOR ROLLER	D.R
▲	PULL CHORD SWITCH	PCS
▌	BELT SWAY SWITCH	BSS
	ZERO SPEED SWITCH	ZSS
	WORKING POINT	W.P
▌	HEAD PULLEY	H.P
	TAIL PULLEY	T.P
	BEND PULLEY	B.P

REFERENCE DRAWINGS/DOCUMENTS	
DRG. NO.	DESCRIPTION
IS-0-PL-708-100-M001	COAL FLOW DIAGRAM
IS-1-FL-708-100-M002	LAYOUT OF COAL HANDLING PLANT
IS-1-GA-708-100-M003	TYPICAL GALLERY CROSS-SECTIONS OF GALLERIES & TUNNELS
----------	G.A OF EXISTING CRUSHER HOUSE

NOTES:-

1. ALL DIMENSIONS ARE IN MM & LEVELS ARE IN METERS.
2. ALL ELEVATIONS ARE REFERRED TO THE FINISHED GROUND FLOOR LEVEL OF POWER HOUSE BUILDING AS EL. 0.00 M WHICH CORRESPONDS TO RL.(+)219.0 M. ABOVE MEAN SEA LEVEL.
3. FINISH FLOOR LEVEL CORRESPONDS TO FFL OF TURBINE HALL BUILDING.
4. PLINTH LEVEL SHOWN IN THE DRAWING ARE 500MM ABOVE FGL. ALL OTHER LEVELS SHOWN ARE W.R.T PLINTH LEVEL.
5. THE DRIVE DIMENSIONS ARE INDICATIVE ONLY AS MARKED * & SHALL BE FINALIZED AFTER GETTING THE DRIVE COMPONENT DRGS.
6. GALLERY SUPPORTING TRESTLE TYPES AND TRESTLE LOCATIONS INDICATED IN THIS DRG. ARE TENTATIVE AND FINALLY THEY SHALL BE AS PER STRUCTURAL DRGS.
7. CIVIL REQUIREMENT INDICATED TENTATIVE.
8. CURB WALL BE PROVIDED AROUND ALL OPENINGS.
9. INSPECTION DOOR SHALL BE LEAK PROOF.
10. PLEASE REFER THIS DRG WITH SHEET 2 & 3 OF 3
11. (*) MARKED DIMENSIONS ARE UNDER HOLD.

			PPS	SS	VB
02.	27.11.17	REVISED AS PER MECON COMMENTS.	PPS	SS	VB
REV.	DATE	BRIEF RECORD	DRN	CHK.	APP.

	TECHNICAL SPECIFICATION		QTY FOR EACH	MAKE
CONVEYOR IS:11592	CONVEYOR NO/EQUIPMENT NO.		BCN-4B	–	
	RATED CAPACITY/DESIGN CAPACITY (T.P.H)		600/720	–	
	BELT WIDTH (MM)/TROUGHING ANGLE		1000/35°	–	
	VERTICAL LIFT (M)		11.500	–	
	HORIZONTAL CRS. (M)		95.000 M	–	
	PROFILE LENGTH (M)		96.370 M	–	
	ENDLESS BELT LENGTH (CONSIDERING SAG) (M)		207.00M	–	
	SPEED (M/SEC.)		3.2	–	
MATERIAL HANDLED	MATERIAL		COAL	–	
	BULK DENSITY FOR CONVEYOR SIZING (TON/CU.M)		0.8	–	
	FOR STRUCTURAL DESIGN (TON/CU.M)		1.2	–	
	LUMP SIZE (MM)		(–)20	–	
	MOISTURE CONTENT		15%	–	
	MATERIAL TEMP.		AMBIENT (MAX. 50°)	–	
BELT IS:1891	TYPE/DUTY		N/N HD	–	
	RATING		630/4	–	
	TOP COVER THICKNESS (MM)		6	–	
	BOTTOM COVER THICKNESS (MM)		3	–	
	BELT TENSION (KN)		Te-23.44, T1-44.33, T2-20.89, T1s-57.22, T2s-20.89	–	
	TYPE OF JOINT		VULCANIZED	–	
DRIVE DETAILS: MOTOR	TYPE		TEFC, IE2, IP55	1 No.	
	POWER RATING(KW)/RPM/FRAME SIZE		90	–	
	SUPPLY VOLTAGE / DUTY		415V,3PHASE,50Hz	–	
DRIVE DETAILS: GEARBOX	TYPE		BEVEL HELICAL	1 No.	
	MODEL NO		CKB250		NAW
	HOLD BACK		YES	–	
	RATIO		16:1	–	
	RATING KW		MECHANICAL 135KW, THERMAL 217KW	–	
DRIVE DETAILS: BRAKE	TYPE		NA	–	
DRIVE DETAILS: COUPLING HIGH SPEED	TYPE/SIZE		FLUID TRACTION / HFD-9	1 No.	FLUIDOMAT
	RATING KW		172	–	
DRIVE DETAILS: COUPLING LOW SPEED	TYPE/SIZE		GEARED / FGC-7	1 No.	FENNER
	RATING KW/100 rpm		390	–	
TAKE UP	TYPE		VGTU	–	
	TRAVEL (MM)		2950	–	
	COUNTER WEIGHT (IN KG)		3000	–	
PULLEYS (IS:8531) DIAMETER MM/NOS.	DRIVE		ø630X-1150LG, EN-/C-45 SHAFT,ø125@BRG. 22228CK+H3128,SN-528	1 No.	
	TAIL		ø500X-1150LG, EN-/C-45 SHAFT,ø100@BRG. 22222CK+H3122,SN-522	1 No.	
	TAKE-UP		ø500X-1150LG, EN-/C-45 SHAFT,ø100@BRG. 22222CK+H3122,SN-522	1 No.	
	BEND		ø400X-1150LG, EN-/C-45 SHAFT,ø80@BRG. 22218CK+H3118,SN-518	2 Nos.	
	SNUB		ø400X-1150LG, EN-/C-45 SHAFT,ø80@BRG. 22218CK+H3118,SN-518	1 No.	
LAGGING THK.MM	DRIVE PULLEY		12 MM DIAMOND GROOVE	–	
	ALL OTHER PULLEYS		10 MM PLAIN NATURAL RUBBER SHOREHARDNESS (+)55 DEG A	–	
IDLERS (IS:8598), CARRYING	3 ROLL 10° TRANSITION IDLERS		ø139.7 ERW x5.4THK. BRG -6205	2 Nos.	
	3 ROLL 20° TRANSITION IDLERS		ø139.7 ERW x5.4THK. BRG -6205	2 Nos.	
	3 ROLL 35° CARRYING IDLERS		ø139.7 ERW x5.4THK. BRG -6205	82 Nos.	
	3 ROLL 35° IMPACT IDLERS		ø139.7 ERW x5.4THK. MS PIPE, OD ø 190,BRG -6207	6 Nos.	
	3 ROLL 35° SELF ALIGNING CARRYING IDLERS		ø139.7 ERW x5.4THK. BRG -6205	7 Nos.	
IDLERS (IS:8598), RETURN	1 ROLL RETURN IDLER		ø139.7 ERW x5.4THK. BRG -6205	24 Nos.	
	1 ROLL S.A. RETURN IDLER		ø139.7 ERW x5.4THK. BRG -6205	4 Nos.	
	1 ROLL SELF CLEANING RETURN IDLER		ø139.7 ERW x5.4THK. BRG -6205	3 Nos.	
	DEFLECTOR ROLLER		ø219+5 MM THK. MS PLATE, 65 MM AT SHAFT	1 No.	
MISCELLANEOUS INFORMATIONS	INTERNAL SCRAPPER TYPE		V-PLOUGH TYPE	1 No.	
	EXTERNAL SCRAPER TYPE	PRIMARY	TORSION ARM TYPE PU MULTI-BLADE	1 No.	
		SECONDARY	SPRUNG BLADE WITH TUNGSTEN CARBIDE TIP	1 No.	
	SKIRT BOARD		4.5 M. Min (10mm ms with 10mm TISCRAL liner with 3mm MS cover) with 20mm rubber curtains of 55A shore hardness	1 EACH	per Loading Point
	DECK PLATE		3.15MM THK. MS THROUGHOUT	1 LOT.	
	HEAD FRAME, TAIL FRAME & DRIVE BASE FRAME		ROLLED SECTION/FAB STRUCT	1 EACH	
	BEND FRAME		ROLLED SECTION/FAB STRUCT	1 EACH	
	STRINGER		ISMC-150	1 LOT	
	SHORT SUPPORT		ISMC-125	1 LOT	
	DISCHARGE CHUTE		20mm thk TISCRAL/SAILHARD on sliding zone & 10mm thk MS plate on non sliding zone	1 LOT	
	SEAL PLATE		12 GAUGE	1 LOT	

PROJECT : ROURKELA PP-II EXPANSION PROJECT (1X250 MW)

OWNER: NTPC-SAIL POWER COMPANY PVT. LTD.

CONSULTANT: MECON LIMITED

EPC CONTRACTOR: BHARAT HEAVY ELECTRICALS LTD INDUSTRIAL SYSTEMS GROUP, BANGALORE

CHP SUPPLIER: OSM PROJECTS PRIVATE LIMITED

	NAME	SIGN	DATE
DRN.	P.P.SINGH		24.08.17
DESN.	P.P.SINGH		24.08.17
CHD.	SS		24.08.17
APP.	VB		24.08.17

NO. OF VAR

TITLE : GA & LOAD DATA OF BCN-4B (1000 B.W)

OSM DRG. NO. OSM-17006-GA-4B-001

NO. OF SHEETS 3

SHEET. NO. 1

SCALE

BHEL JOB NO.

BHEL-ISG DRG. NO.: IS-1-GA-708-101-M013

REV. 2

SIZE-A1

COPY RIGHT AND CONFIDENTIAL
The information on this document is the property of BHARAT HEAVY ELECTRICALS LIMITED it must not be used directly or indirectly in any way determental to the interest of the company.

DRAWING NO. IS-1-GA-708-101-M013

FIRST ANGLE PROJECTION

ALL DIMENSIONS ARE IN MM

COPY RIGHT AND CONFIDENTIAL
The information on this document is the property of BHARAT HEAVY ELECTRICALS LIMITED
it must not be used directly or indirectly in any way deterimental to the interest of the company.

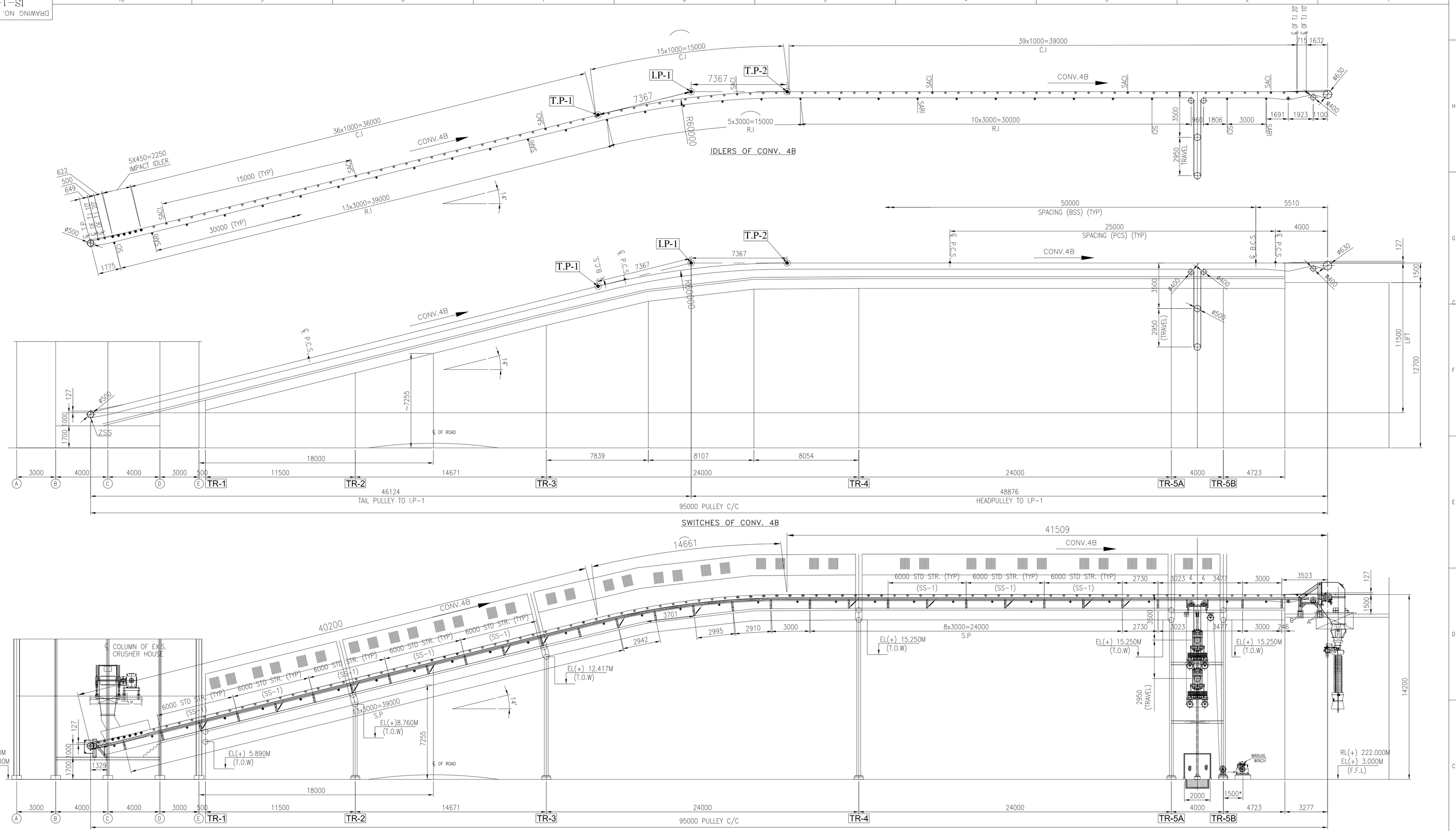

ELEVATION OF CONV. 4B

NOTES:-

1. ALL DIMENSIONS ARE IN MM & LEVELS ARE IN METERS.
2. FOR LOAD DATA AND OTHER NOTES REFER SHEET 1 OF 3 & 3 OF 3

REV.	DATE	BRIEF RECORD	DRN	CHK.	APP.
			PPS	SS	VB
02.	27.11.17	REVISED AS PER MECON COMMENTS.	PPS	SS	VB

PROJECT : ROURKELA PP-II EXPANSION PROJECT (1X250 MW)

OWNER: NTPCL — NTPC-SAIL POWER COMPANY PVT. LTD.

CONSULTANT: MECON LIMITED

EPC CONTRACTOR: BHARAT HEAVY ELECTRICALS LTD, INDUSTRIAL SYSTEMS GROUP, BANGALORE

CHP SUPPLIER: OSM PROJECTS PRIVATE LIMITED

	NAME	SIGN	DATE
DRN.	P.P.SINGH		24.08.17
DESN.	P.P.SINGH		24.08.17
CHD.	SS		24.08.17
APP.	VB		24.08.17

TITLE : GA & LOAD DATA OF BCN-4B (1000 B.W)

OSM DRG. NO.	NO. OF SHEETS	3
OSM-17006-GA-4B-001	SHEET. NO.	2
BHEL JOB NO. / BHEL-ISG DRG. NO.: IS-1-GA-708-101-M013	REV.	2

SCALE

SIZE-A1

FORMAT SIZE A1

FIRST ANGLE PROJECTION

ALL DIMENSIONS ARE IN MM

DRAWING NO. IS-1-GA-708-101-M013

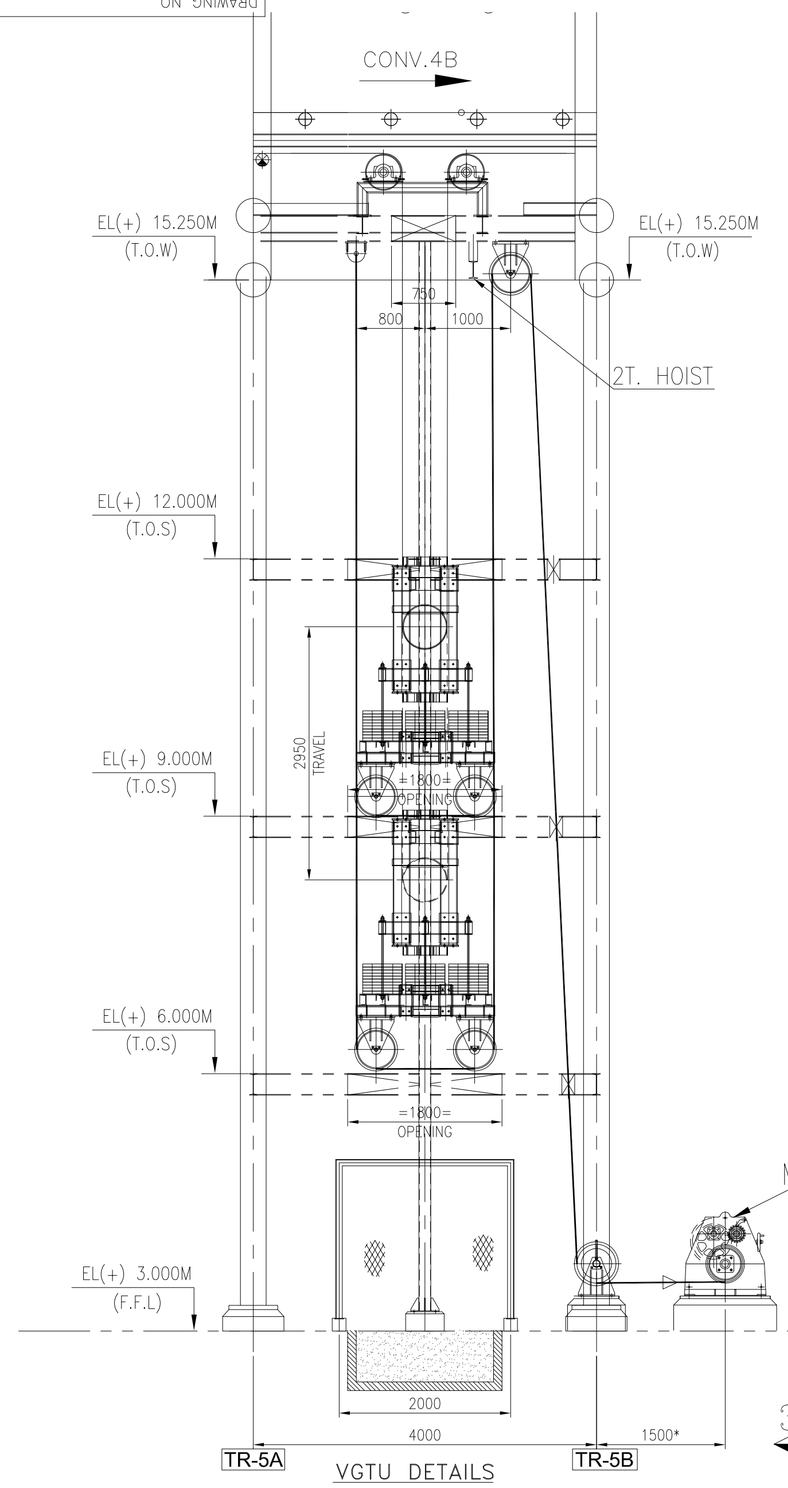

VGTU DETAILS

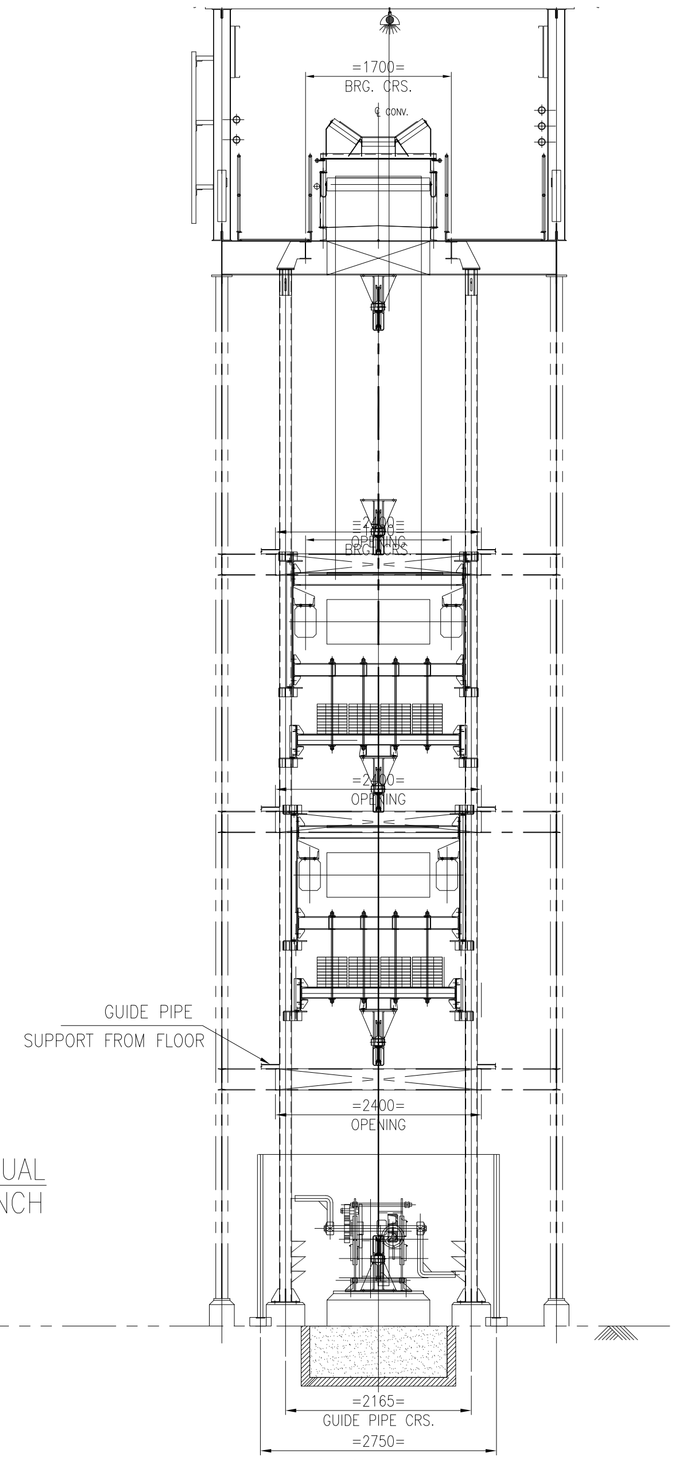

VIEW 3–3

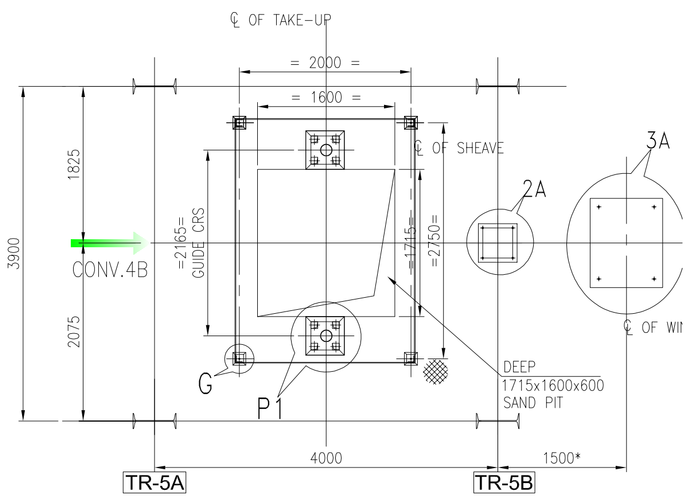

PLAN AT 3.000M LVL

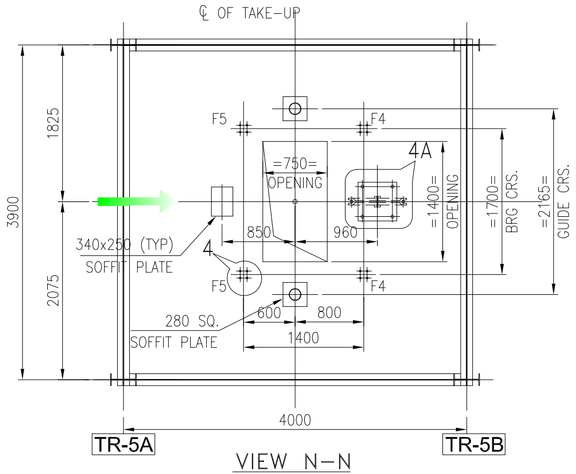

VIEW N–N

(FOR BEND PULLEY FRAME)

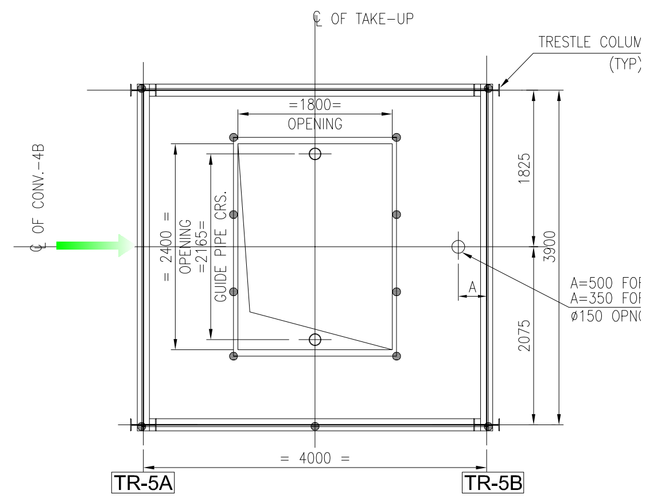

PLAN AT EL(+)6.000M & EL(+)9.000M (T.O.S)

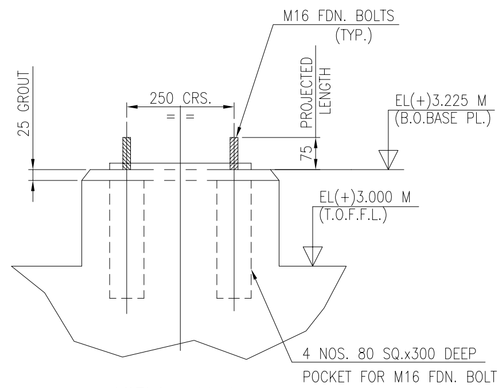

VIEW : M–M

(MKD. P1)

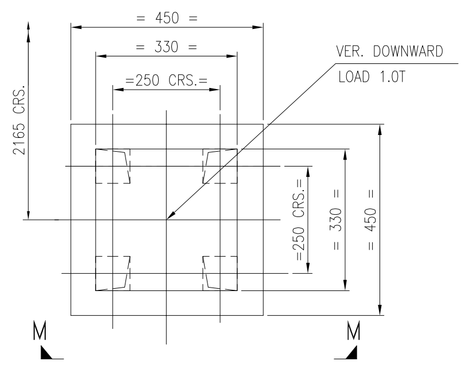

DETAIL OF PEDESTAL

MKD. P1

(FOR TAKE-UP GUIDE RODS)

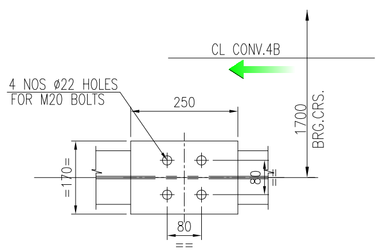

DETAIL–'4'

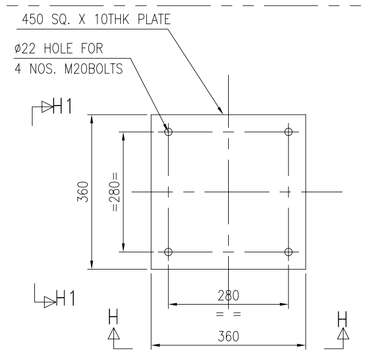

DETAIL –2A

HOLD

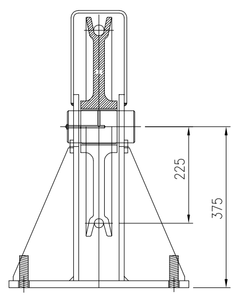

VIEW H1–H1

HOLD

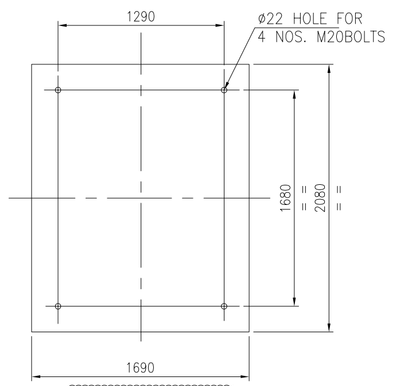

DETAIL:3A

(BASE PLATE DETAIL OF WINCH)

HOLD

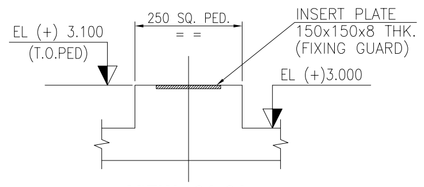

VIEW : 3A-3A

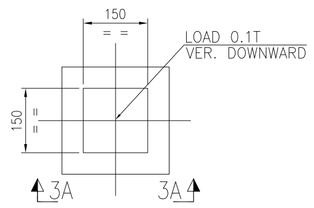

DETAIL-G

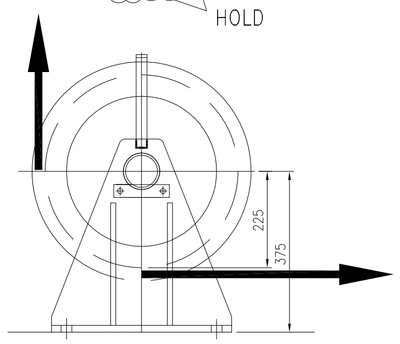

VIEW H–H

HOLD

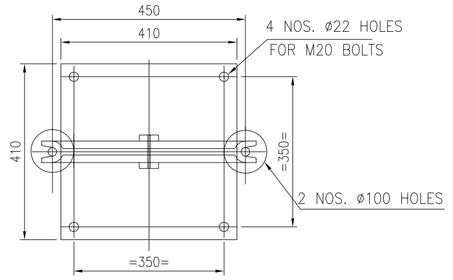

DETAIL–4A

HOLD

LOAD TABLE **(FOR BEND PULLEY FRAME)**

POINTS	NOs.	VERTICAL LOAD (T)		HORIZONTAL LOAD (T)
		DEAD LOAD	BELT PULL	
F4	2	+1.04	+1.69	+0.91
F5	2	+1.04	+1.69	−0.91

NOTES:–

1. ALL DIMENSIONS ARE IN MM & LEVELS ARE IN METERS.
2. FOR LOAD DATA AND OTHER NOTES REFER SHEET 1 OF 3 & 2 OF 3

REV.	DATE	BRIEF RECORD	DRN	CHK.	APP.
			PPS	SS	VB
02.	27.11.17	REVISED AS PER MECON COMMENTS.	PPS	SS	VB

PROJECT : ROURKELA PP–II EXPANSION PROJECT (1X250 MW)

OWNER: NTPCL — NTPC–SAIL POWER COMPANY PVT. LTD.

CONSULTANT: MECON LIMITED

EPC CONTRACTOR: BHARAT HEAVY ELECTRICALS LTD INDUSTRIAL SYSTEMS GROUP, BANGALORE

CHP SUPPLIER: OSM PROJECTS PRIVATE LIMITED

	NAME	SIGN	DATE
DRN.	P.P.SINGH		24.08.17
DESN.	P.P.SINGH		24.08.17
CHD.	SS		24.08.17
APP.	VB		24.08.17

TITLE : GA & LOAD DATA OF BCN–4B (1000 B.W)

		NO. OF VAR
OSM DRG. NO.		NO. OF SHEETS: 3
OSM-17006-GA-4B-001		SHEET. NO.: 3

SCALE | BHEL JOB NO. | BHEL-ISG DRG. NO.: IS–1–GA–708–101–M013 | REV. 2

SIZE-A1

FORMAT SIZE A1

COPY RIGHT AND CONFIDENTIAL
The information on this document is the property of BHARAT HEAVY ELECTRICALS LIMITED
it must not be used directly or indirectly in any way detrimental to the interest of the company.